Thule HangOn
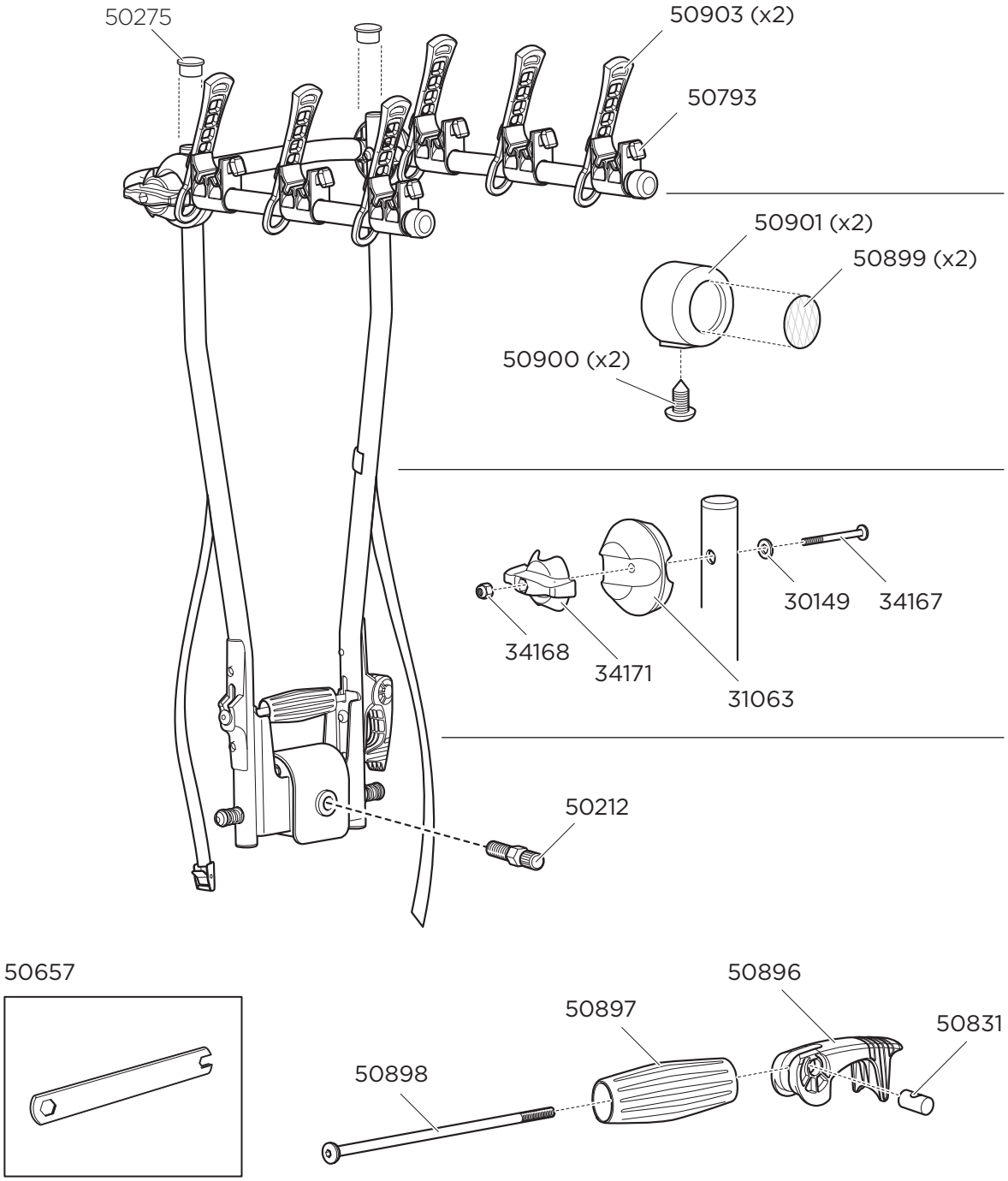
972